MEASUMAX 12-321

Metric Outside Micrometer - Large Cast Frame

Tools 4 Industry
www.t4i.com.au
sales@t4i.com.au

MEASUMAX Metric Outside Micrometer - Large Cast Frame 12-321

Description

Measumax metric micrometers represent exceptional value. Special care has been taken in design and workmanship to ensure high precision and long life.
Measumax metric micrometers meet industry standards for specification and accuracy

Features

- Carbide measuring faces - Painted cast frame
- Micro-fine clear graduations on satin chrome finish
- Measuring face 6.5mm, Flatness 0.0008mm
- Ratchet stop for exact repetitive readings
- Includes deluxe foam lined plastic case and wrench
- Graduation 0.01mm
- Supplied with setting standards

Specifications

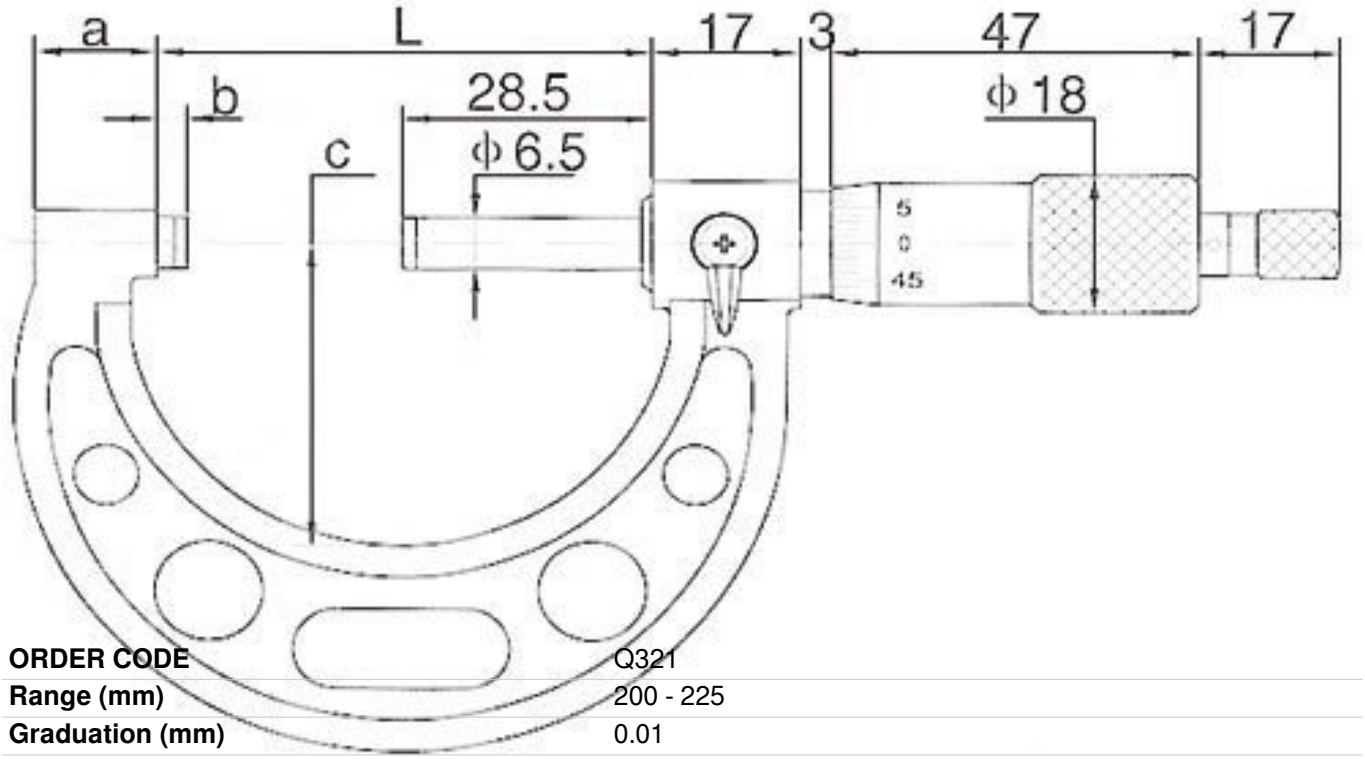

ORDER CODE	Q321
Range (mm)	200 - 225
Graduation (mm)	0.01
Accuracy (mm)	0.008
Setting Bar (No.)	1
a (mm)	19.4
b (mm)	5.5
c (mm)	130
L (mm)	234
m061	~